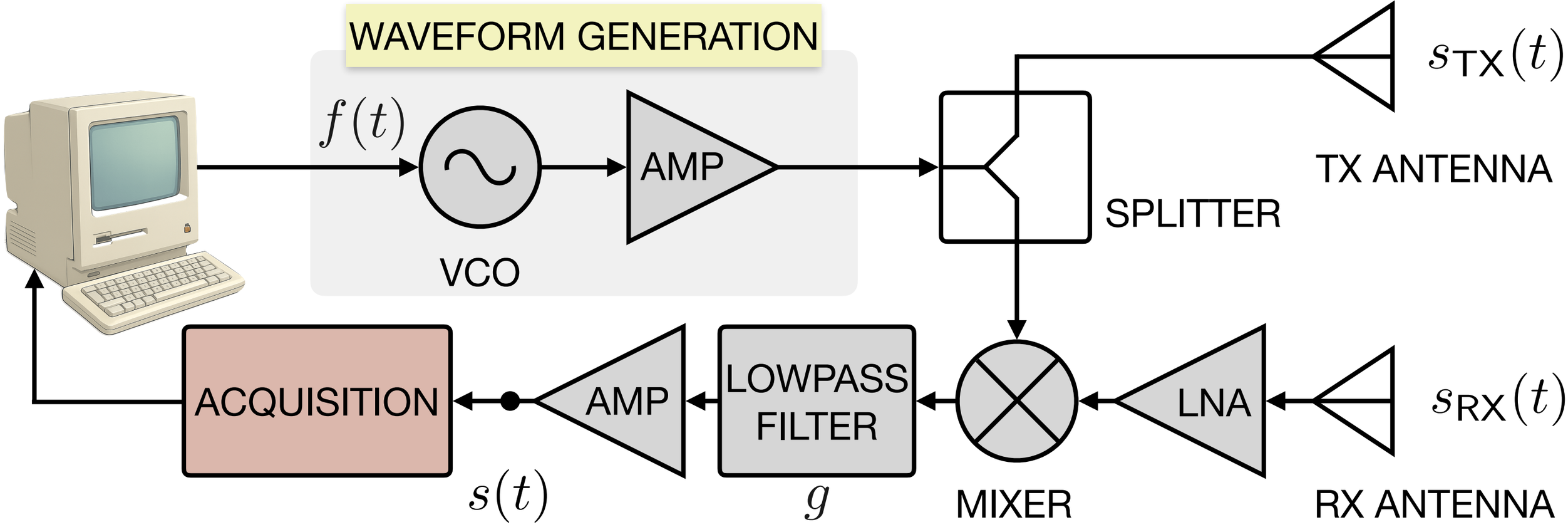
WAVEFORM GENERATION
$f(t)$
VCO
AMP
SPLITTER
$s_{\mathrm{TX}}(t)$
TX ANTENNA
ACQUISITION
AMP
$s(t)$
LOWPASS FILTER
g
MIXER
LNA
$s_{\mathrm{RX}}(t)$
RX ANTENNA